HÄFELE

Soft Close Drawer System H135
Installation Manual

552.57.XXX

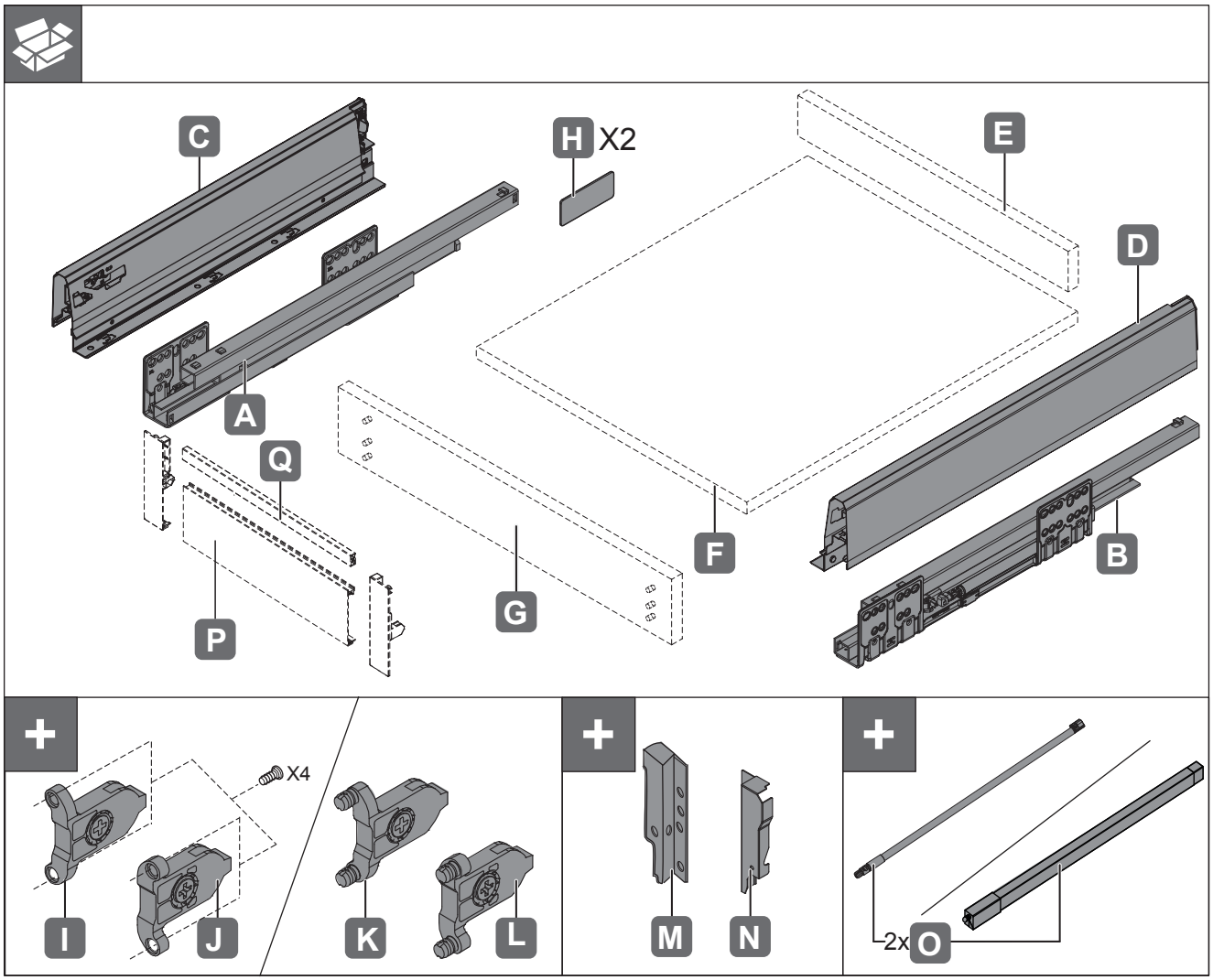

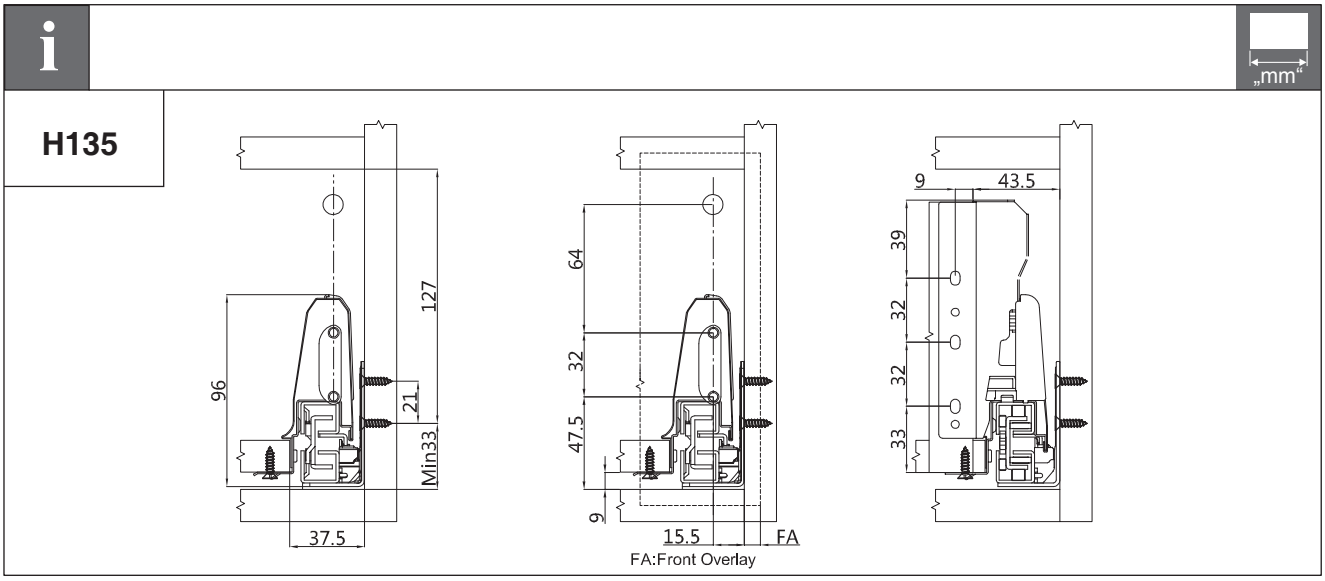

06/2019

1

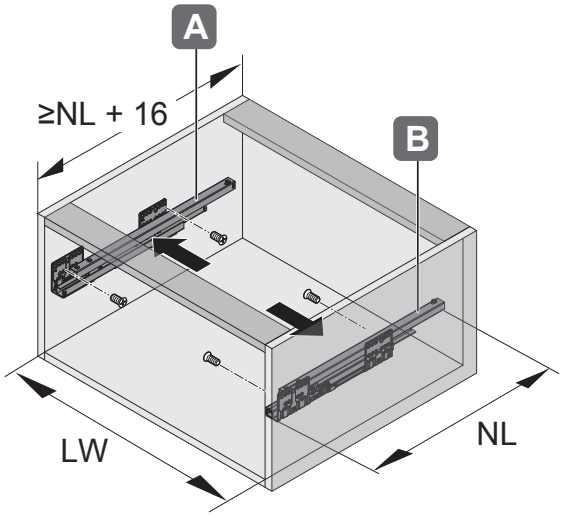
A
≥NL + 16
B
LW
NL

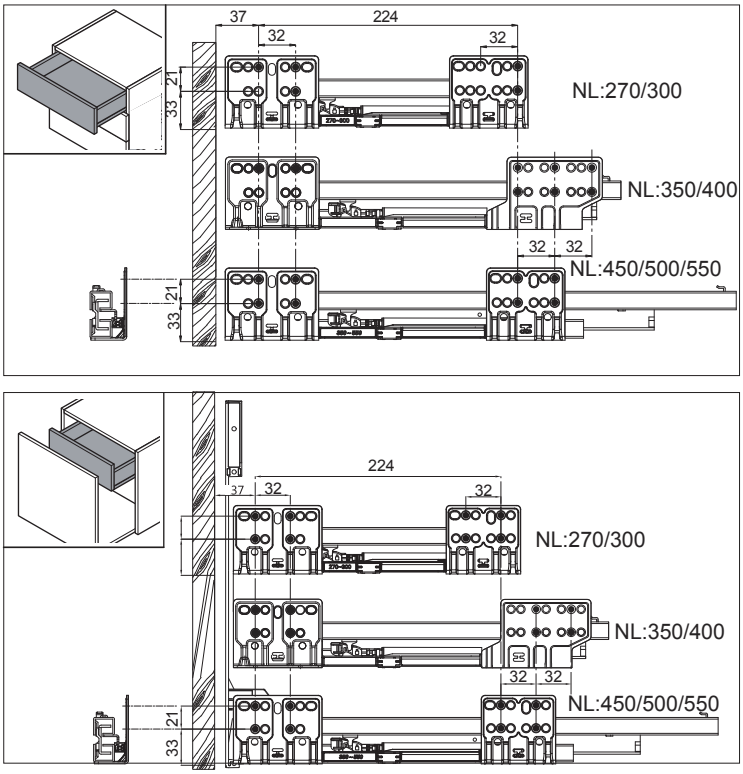
37
224
32
32
21
33
NL:270/300
NL:350/400
32
32
NL:450/500/550
224
37
32
32
NL:270/300
NL:350/400
32
32
NL:450/500/550

2

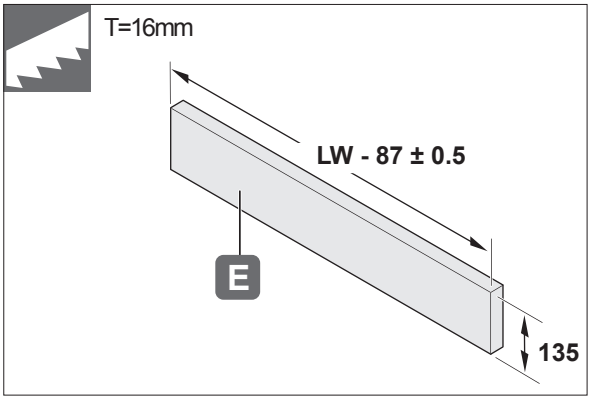
T=16mm
LW - 87 ± 0.5
E
135

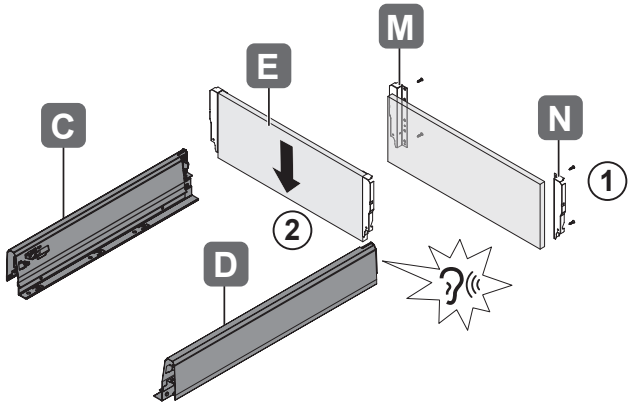
M
E
C
N
1
2
D

3

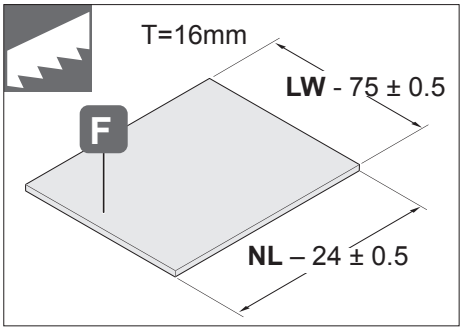
T=16mm
LW - 75 ± 0.5
F
NL – 24 ± 0.5

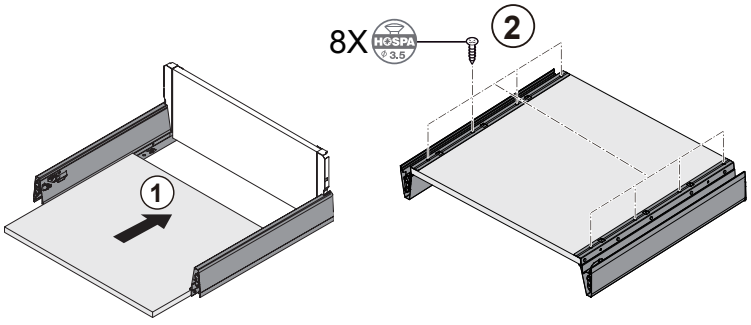
8X
2
1

06/2019

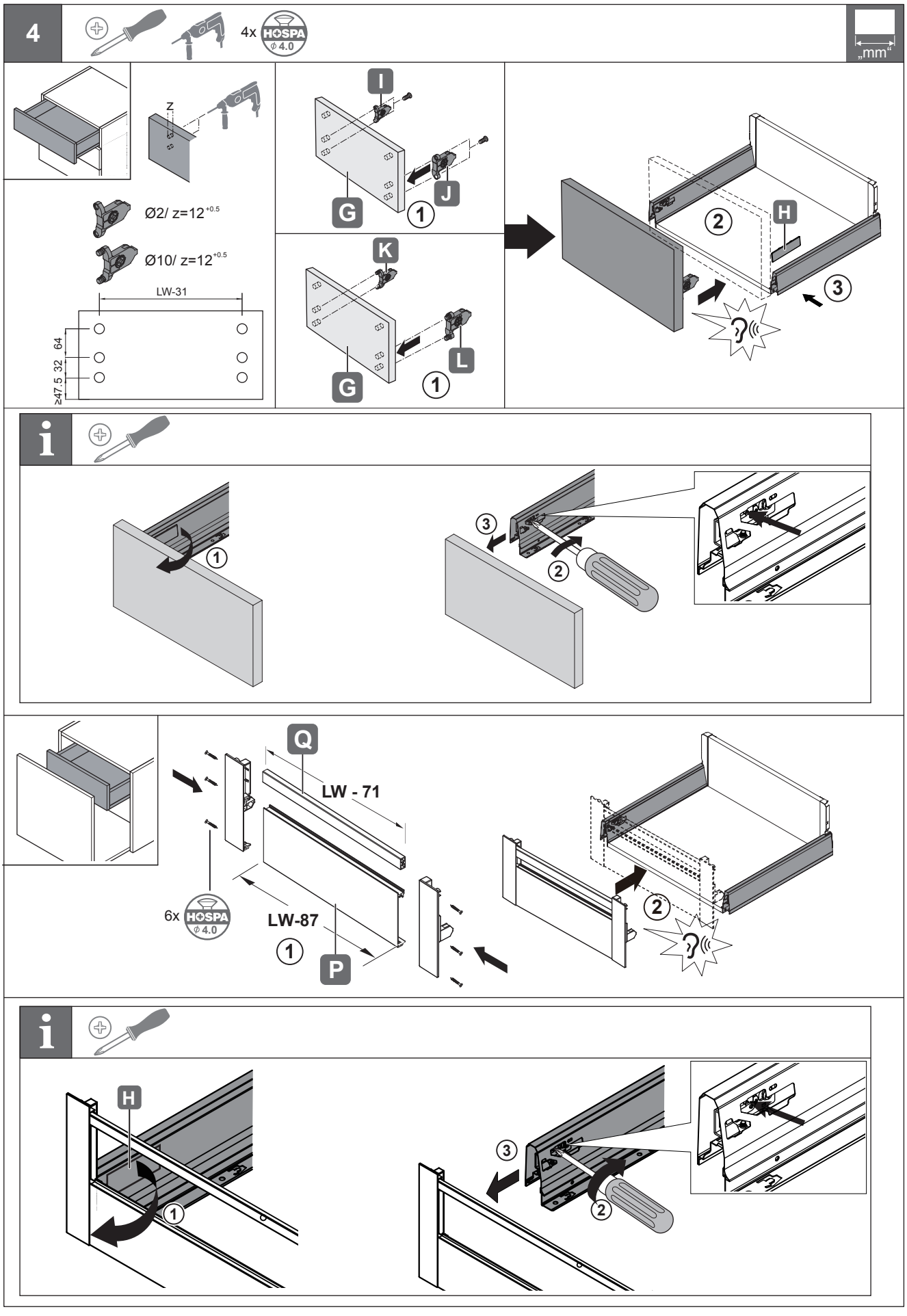
4
4x HOSPA ϕ 4.0
„mm“
z
Ø2/ z=12+0.5
Ø10/ z=12+0.5
LW-31
64
32
≥47.5
I
J
G
1
K
L
2
H
3
Q
LW - 71
6x HOSPA ϕ 4.0
LW-87
P

06/2019

5

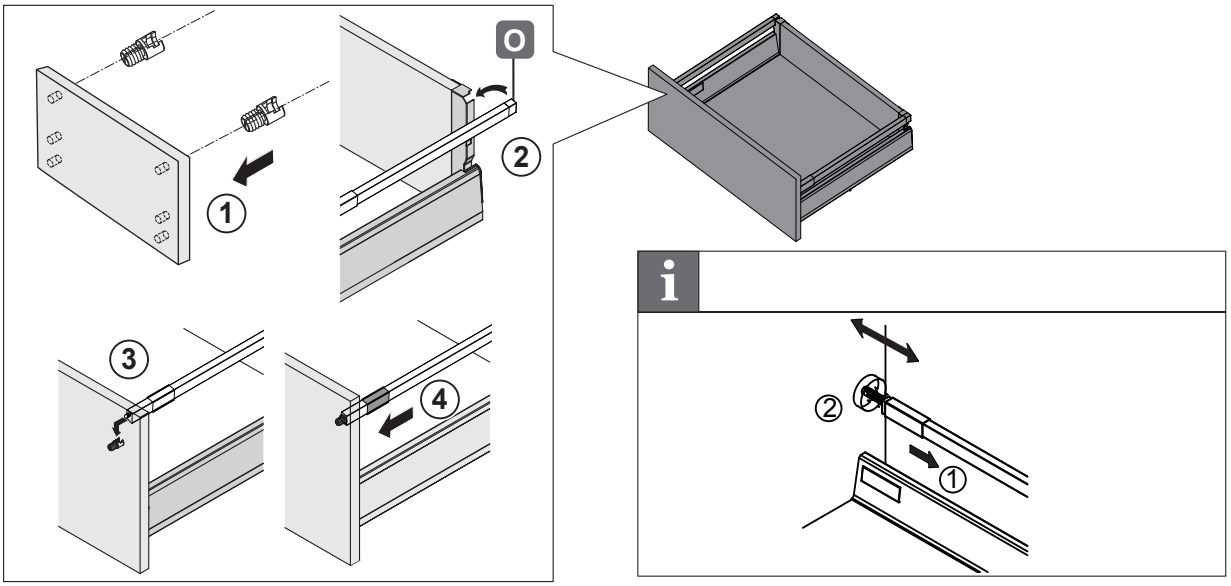

6

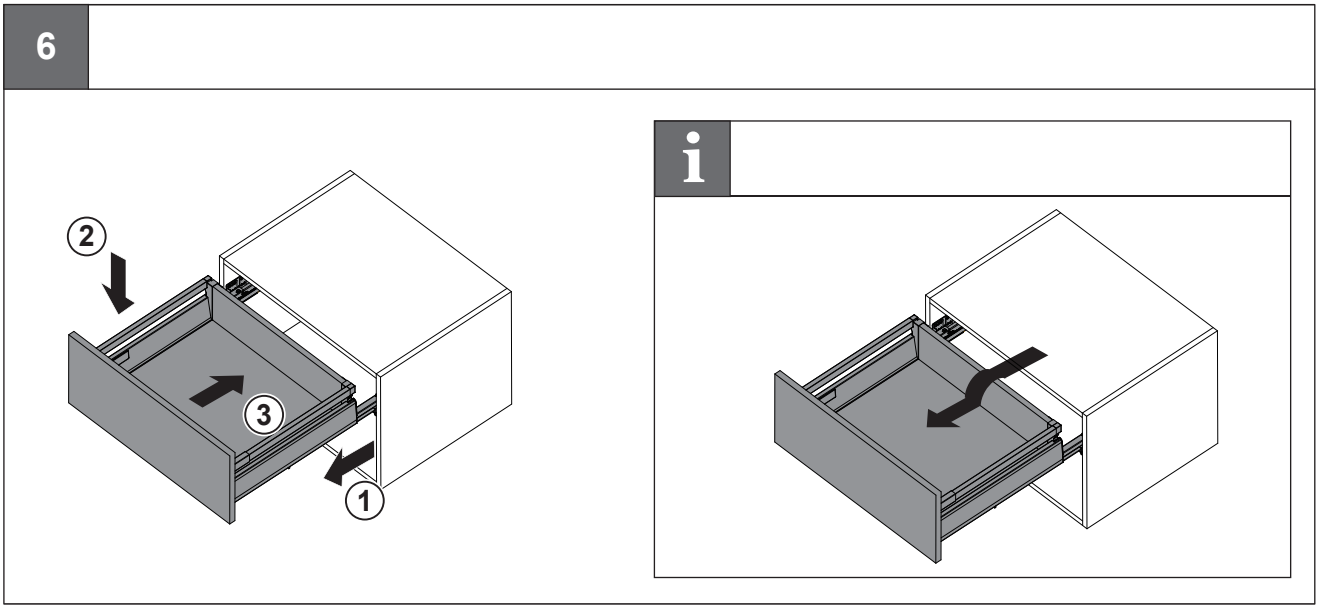

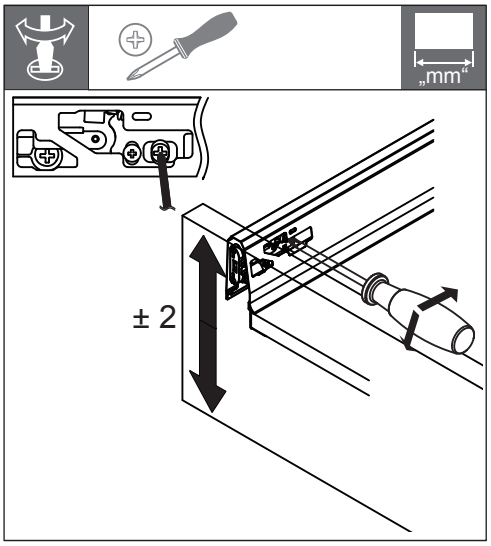

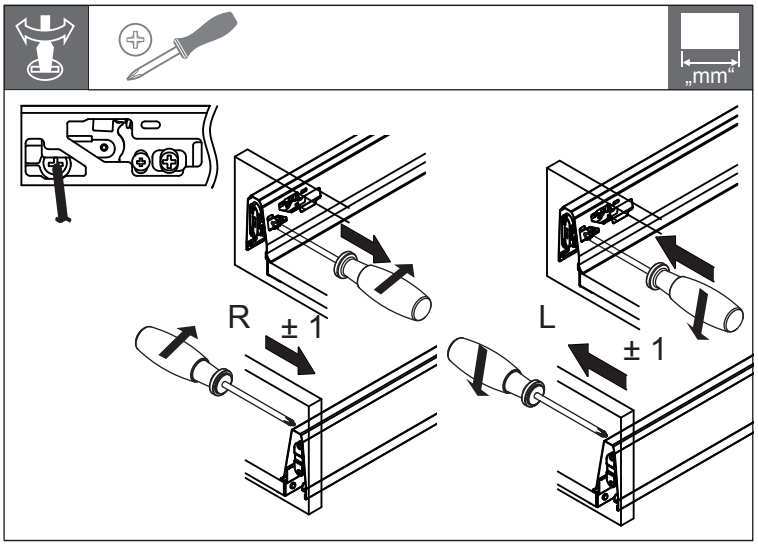

06/2019

Subject to alterations